# Solutions - Homework 4

(Due date: November 14th @ 11:59 pm)

Presentation and clarity are very important! Show your procedure!

## Problem 1 (12 pts)

- Complete the timing diagram of the following circuit. $G = G_3G_2G_1G_0 = 1011$, $Q = Q_3Q_2Q_1Q_0$

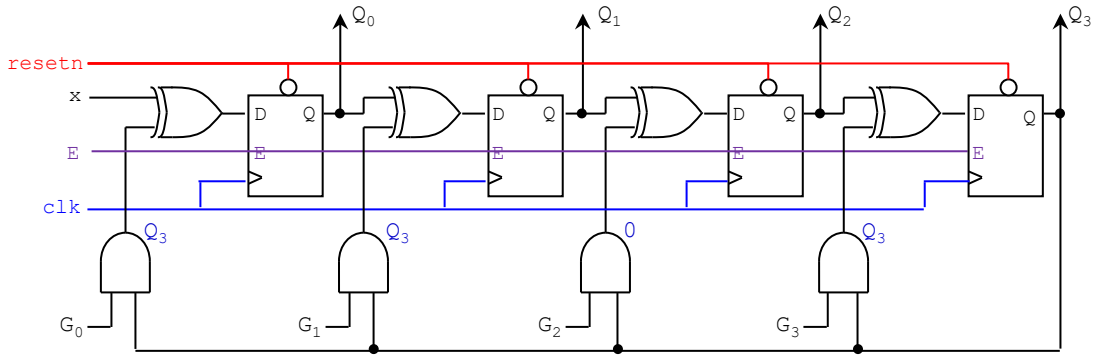


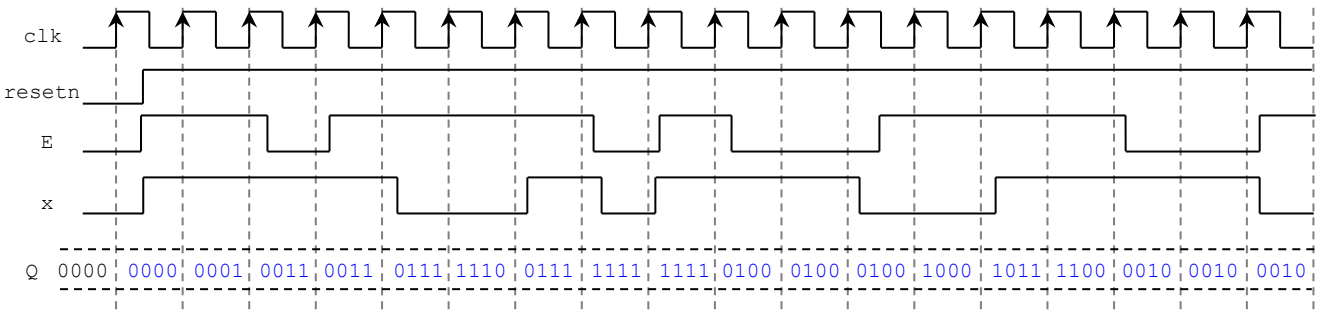


## Problem 2 (21 pts)

- Design a counter using a Finite State Machine (FSM):
  *Counter features*:
  - ✓ Count: **000**, 001, 011, 101, 111, 010, 100, 110, **000**, 001, 011, 101, …
  - ✓ Input E: Synchronous input that increases the count when it is set to '1'.
  - ✓ Output z: It becomes '1' when the count is 110.
  - ✓ resetn: Asynchronous active-low input signal. It initializes the count to 000 .

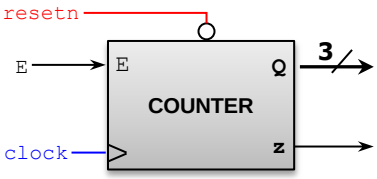


- Provide the State Diagram (any representation), State Table, and the Excitation Table of this circuit. (13 pts)
- Provide the excitation equations (simplify your circuit using K-maps or the Quine-McCluskey algorithm) (5 pts)
- Sketch the circuit. Is this a Mealy or a Moore machine? Why? (3 pts)

---

- *State Diagram and State Table*:

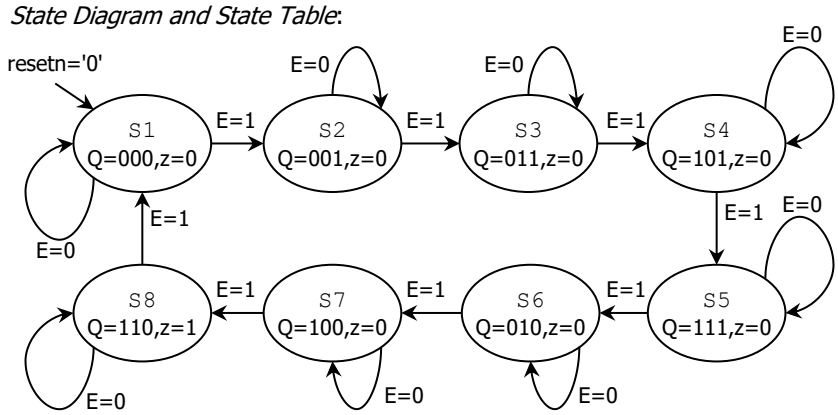


| E | PRESENT STATE | NEXT STATE | z |
|---|---|---|---|
| 0 | S1 | S1 | 0 |
| 0 | S2 | S2 | 0 |
| 0 | S3 | S3 | 0 |
| 0 | S4 | S4 | 0 |
| 0 | S5 | S5 | 0 |
| 0 | S6 | S6 | 0 |
| 0 | S7 | S7 | 0 |
| 0 | S8 | S8 | 1 |
| 1 | S1 | S2 | 0 |
| 1 | S2 | S3 | 0 |
| 1 | S3 | S4 | 0 |
| 1 | S4 | S5 | 0 |
| 1 | S5 | S6 | 0 |
| 1 | S6 | S7 | 0 |
| 1 | S7 | S8 | 0 |
| 1 | S8 | S1 | 1 |

The output z only depends on the present state ⇒ Moore FSM.

- *State Assignment and Excitation Table*:

  - ✓ S1: Q = 000
  - ✓ S2: Q = 001
  - ✓ S3: Q = 011
  - ✓ S4: Q = 101
  - ✓ S5: Q = 111
  - ✓ S6: Q = 010
  - ✓ S7: Q = 100
  - ✓ S8: Q = 110

| | PRESENT STATE | NEXTSTATE | |
|---|---|---|---|
| E | $Q_2Q_1Q_0$ (t) | $Q_2Q_1Q_0$ (t+1) | z |
| 0 | 0 0 0 | 0 0 0 | 0 |
| 0 | 0 0 1 | 0 0 1 | 0 |
| 0 | 0 1 1 | 0 1 1 | 0 |
| 0 | 1 0 1 | 1 0 1 | 0 |
| 0 | 1 1 1 | 1 1 1 | 0 |
| 0 | 0 1 0 | 0 1 0 | 0 |
| 0 | 1 0 0 | 1 0 0 | 0 |
| 0 | 1 1 0 | 1 1 0 | 1 |
| 1 | 0 0 0 | 0 0 1 | 0 |
| 1 | 0 0 1 | 0 1 1 | 0 |
| 1 | 0 1 1 | 1 0 1 | 0 |
| 1 | 1 0 1 | 1 1 1 | 0 |
| 1 | 1 1 1 | 0 1 0 | 0 |
| 1 | 0 1 0 | 1 0 0 | 0 |
| 1 | 1 0 0 | 1 1 0 | 0 |
| 1 | 1 1 0 | 0 0 0 | 1 |

- *Excitation equations and minimization:*

$$Q_2(t+1) \leftarrow \bar{E}Q_2 + Q_2\overline{Q_1} + E\overline{Q_2}Q_1 = \overline{EQ_1}Q_2 + EQ_1\overline{Q_2}$$
$$= Q_2 \oplus (EQ_1)$$

$$Q_1(t+1) \leftarrow \bar{E}Q_1 + EQ_2\overline{Q_1} + Q_2Q_1Q_0 + E\overline{Q_1}Q_0$$
$$= \bar{E}Q_1 + E\overline{Q_1}(Q_2 + Q_0) + Q_2Q_1Q_0$$

$$Q_0(t+1) \leftarrow \overline{Q_1}Q_0 + \bar{E}Q_0 + \overline{Q_2}Q_0 + E\overline{Q_2}\,\overline{Q_1}$$
$$= \overline{EQ_2Q_1}Q_0 + E\overline{Q_2}\,\overline{Q_1}$$

$$z = Q_2Q_1\overline{Q_0}$$

**$Q_2$ (t+1)**

| $Q_1Q_0$ \ $EQ_2$ | 00 | 01 | 11 | 10 |
|---|---|---|---|---|
| 00 | 0 | 1 | 1 | 0 |
| 01 | 0 | 1 | 1 | 0 |
| 11 | 0 | 1 | 0 | 1 |
| 10 | 0 | 1 | 0 | 1 |

**$Q_1$ (t+1)**

| $Q_1Q_0$ \ $EQ_2$ | 00 | 01 | 11 | 10 |
|---|---|---|---|---|
| 00 | 0 | 0 | 1 | 0 |
| 01 | 0 | 0 | 1 | 1 |
| 11 | 1 | 1 | 1 | 0 |
| 10 | 1 | 1 | 0 | 0 |

**$Q_0$ (t+1)**

| $Q_1Q_0$ \ $EQ_2$ | 00 | 01 | 11 | 10 |
|---|---|---|---|---|
| 00 | 0 | 0 | 0 | 1 |
| 01 | 1 | 1 | 1 | 1 |
| 11 | 1 | 1 | 0 | 1 |
| 10 | 0 | 0 | 0 | 0 |

**z**

| $Q_1Q_0$ \ $EQ_2$ | 00 | 01 | 11 | 10 |
|---|---|---|---|---|
| 00 | 0 | 0 | 0 | 0 |
| 01 | 0 | 0 | 0 | 0 |
| 11 | 0 | 0 | 0 | 0 |
| 10 | 0 | 1 | 1 | 0 |

- *Circuit Implementation:*

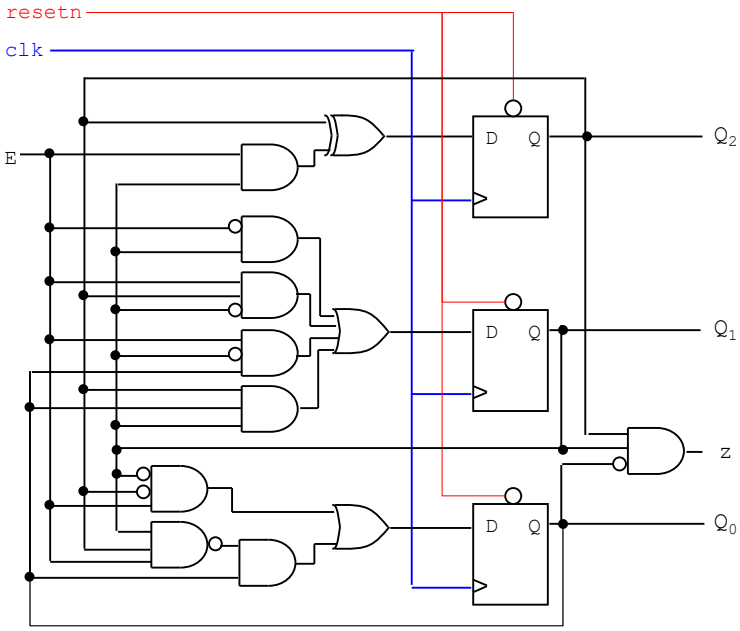

# PROBLEM 3 (20 PTS)

- Sequence detector: The machine generates $z = 1$ when it detects the sequence 00110101. Once the sequence is detected, the circuit looks for a new sequence.

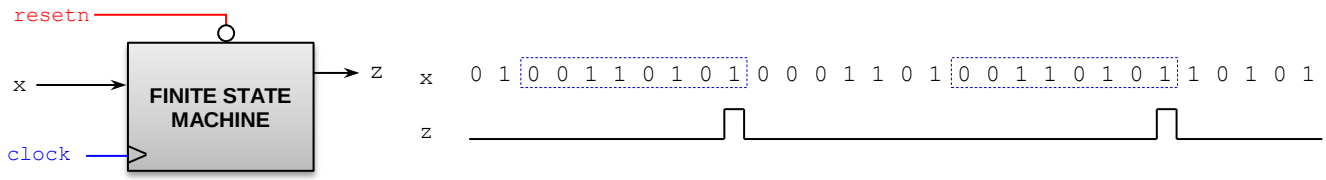


- ✓ Draw the State Diagram (any representation) of this circuit with input $x$ and output $z$. (5 pts)
- ✓ Complete the State Table and the Excitation Table. (4 pts)
- ✓ Which type is this FSM? (Mealy) (Moore) Why? _____

*State Assignment:*

S1: Q = 000
S2: Q = 001
S3: Q = 010
S4: Q = 011
S5: Q = 100
S6: Q = 101
S7: Q = 110
S8: Q = 111

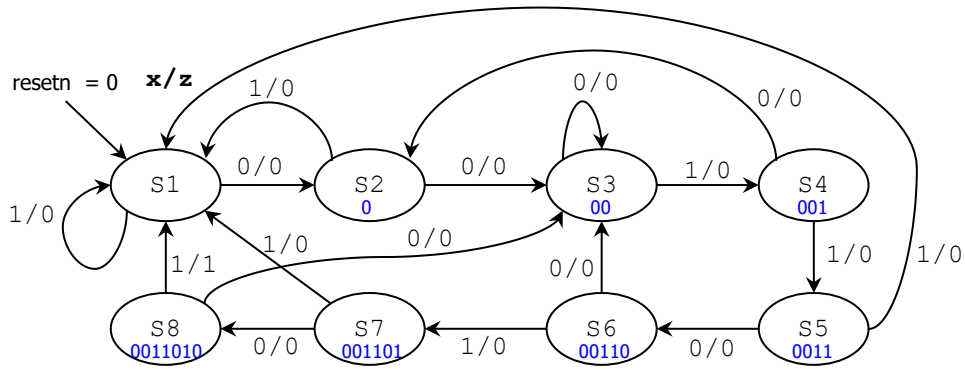


| x | PRESENT STATE | NEXT STATE | z |
|---|---|---|---|
| 0 | S1 | S2 | 0 |
| 0 | S2 | S3 | 0 |
| 0 | S3 | S3 | 0 |
| 0 | S4 | S2 | 0 |
| 0 | S5 | S6 | 0 |
| 0 | S6 | S3 | 0 |
| 0 | S7 | S8 | 0 |
| 0 | S8 | S3 | 0 |
| 1 | S1 | S1 | 0 |
| 1 | S2 | S1 | 0 |
| 1 | S3 | S4 | 0 |
| 1 | S4 | S5 | 0 |
| 1 | S5 | S1 | 0 |
| 1 | S6 | S7 | 0 |
| 1 | S7 | S1 | 0 |
| 1 | S8 | S1 | 1 |

| | PRESENT STATE | NEXTSTATE | |
|---|---|---|---|
| x | $Q_2Q_1Q_0$ (t) | $Q_2Q_1Q_0$ (t+1) | z |
| 0 | 0 0 0 | 0 0 1 | 0 |
| 0 | 0 0 1 | 0 1 0 | 0 |
| 0 | 0 1 0 | 0 1 0 | 0 |
| 0 | 0 1 1 | 0 0 1 | 0 |
| 0 | 1 0 0 | 1 0 1 | 0 |
| 0 | 1 0 1 | 0 1 0 | 0 |
| 0 | 1 1 0 | 1 1 1 | 0 |
| 0 | 1 1 1 | 0 1 0 | 0 |
| 1 | 0 0 0 | 0 0 0 | 0 |
| 1 | 0 0 1 | 0 0 0 | 0 |
| 1 | 0 1 0 | 0 1 1 | 0 |
| 1 | 0 1 1 | 1 0 0 | 0 |
| 1 | 1 0 0 | 0 0 0 | 0 |
| 1 | 1 0 1 | 1 1 0 | 0 |
| 1 | 1 1 0 | 0 0 0 | 0 |
| 1 | 1 1 1 | 0 0 0 | 1 |

This is a Mealy FSM. The output $z$ depends on the input as well as the present state.

- Given the following FSM circuit. ($w$: input, $z$: output, $Q_1Q_0$: state) (10 pts)
  - ✓ Provide the Excitation Table, State Table, and the State Diagram (any representation).
  - ✓ Get the excitation equations and the Boolean equation for $z$. (6 pts)
  - ✓ Which type is this FSM? (1 pt.)
    (Mealy) (Moore)

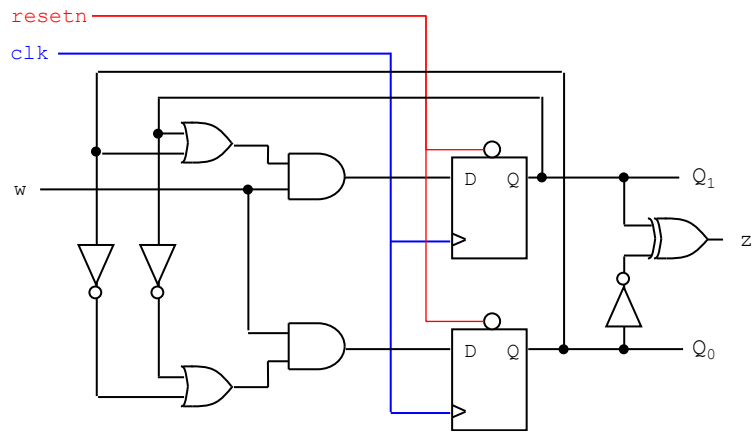


$Q_1(t+1) \leftarrow (Q_1 + Q_0)w$
$Q_0(t+1) \leftarrow \overline{Q_1Q_0}w$
$z = \overline{Q_1 \oplus Q_0}$

State Assignment:
S0: Q = 00 S1: Q = 01
S2: Q = 10 S3: Q = 11

| PRESENT STATE | | | NEXTSTATE | | |
|---|---|---|---|---|---|
| w | $Q_1$ | $Q_0$ (t) | $Q_1$ | $Q_0$ (t+1) | z |
| 0 | 0 | 0 | 0 | 0 | 1 |
| 0 | 0 | 1 | 0 | 0 | 0 |
| 0 | 1 | 0 | 0 | 0 | 0 |
| 0 | 1 | 1 | 0 | 0 | 1 |
| 1 | 0 | 0 | 0 | 1 | 1 |
| 1 | 0 | 1 | 1 | 1 | 0 |
| 1 | 1 | 0 | 1 | 1 | 0 |
| 1 | 1 | 1 | 1 | 0 | 1 |

| w | PRESENT STATE | NEXT STATE | z |
|---|---|---|---|
| 0 | S0 | S0 | 1 |
| 0 | S1 | S0 | 0 |
| 0 | S2 | S0 | 0 |
| 0 | S3 | S0 | 1 |
| 1 | S0 | S1 | 1 |
| 1 | S1 | S3 | 0 |
| 1 | S2 | S3 | 0 |
| 1 | S3 | S2 | 1 |

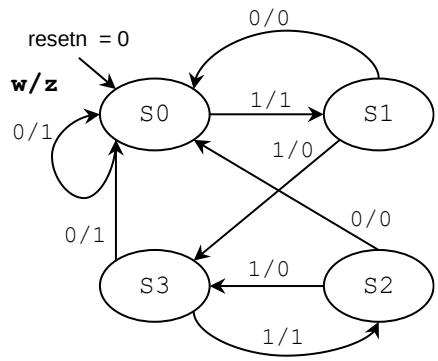


This is a Moore FSM. The output $z$ depends only on the present state.

# PROBLEM 4 (15 PTS)

- Provide the state diagram (in ASM form) of the FSM whose VHDL description is shown below. Is it a Mealy or a Moore FSM?
- Complete the Timing Diagram. (9 pts)

```
library ieee;
use ieee.std_logic_1164.all;

entity myfsm is
   port ( clk, resetn: in std_logic;
          a, b: in std_logic;
          x,w,z: out std_logic);
end myfsm;
```

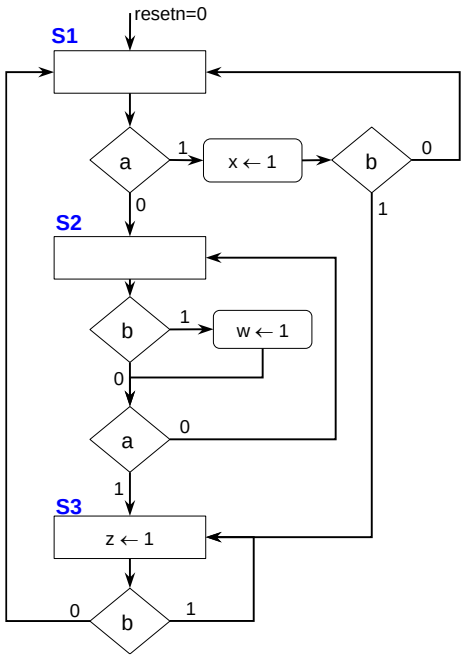


```
architecture behavioral of myfsm is
   type state is (S1, S2, S3);
   signal y: state;
begin
  Transitions: process (resetn, clk, a, b)
  begin
     if resetn = '0' then y <= S1;
     elsif (clk'event and clk = '1') then
        case y is
          when S1 =>
            if a = '1' then
              if b = '1' then y <= S3; else y <= S1; end if;
            else
              y <= S2;
            end if;

          when S2 =>
            if a = '1' then y <= S3; else y <= S2; end if;

          when S3 =>
            if b = '1' then y <= S3; else y <= S1; end if;
        end case;
     end if;
  end process;

  Outputs: process (y, a, b)
  begin
      x <= '0'; w <= '0'; z <= '0';
      case y is
         when S1 => if a = '1' then x <= '1'; end if;
         when S2 => if b = '1' then w <= '1'; end if;
         when S3 => z <= '1';
      end case;
  end process;
end behavioral;
```

This is a Mealy FSM. The outputs depend on the input as well as the present state.

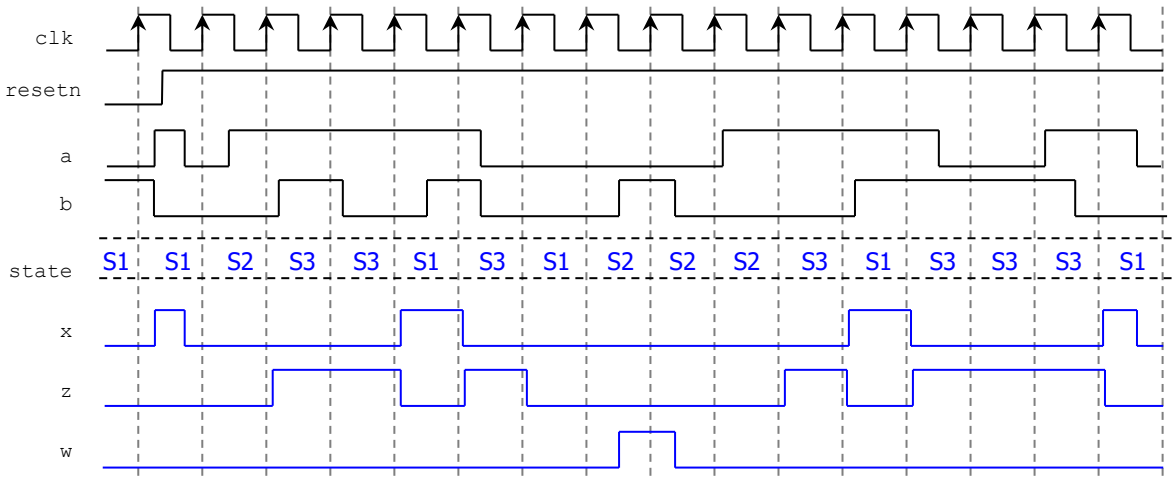

# PROBLEM 5 (18 PTS)

- Complete the timing diagram of the following digital system that includes an FSM (in ASM form) and a datapath circuit. Generic components: counter, parallel access shift registers, register. See *Lecture Notes – Unit 6* for their behavior.

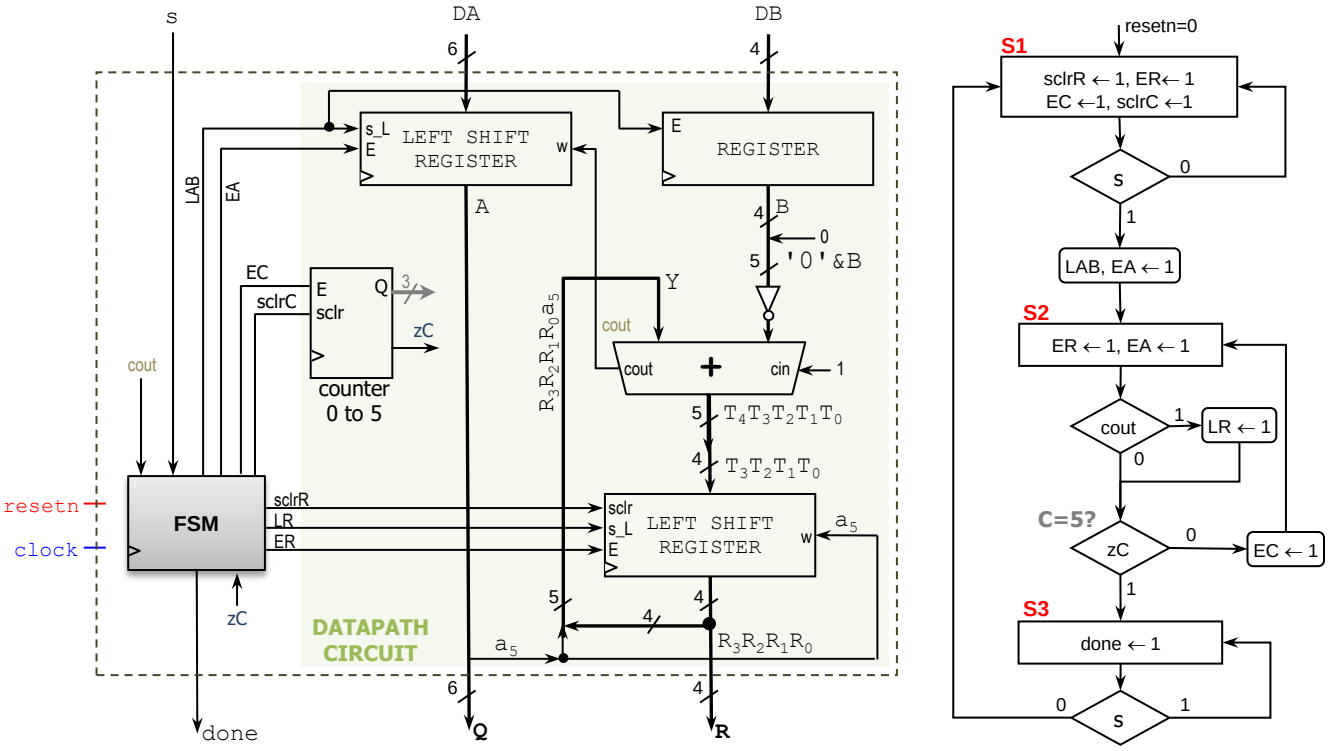


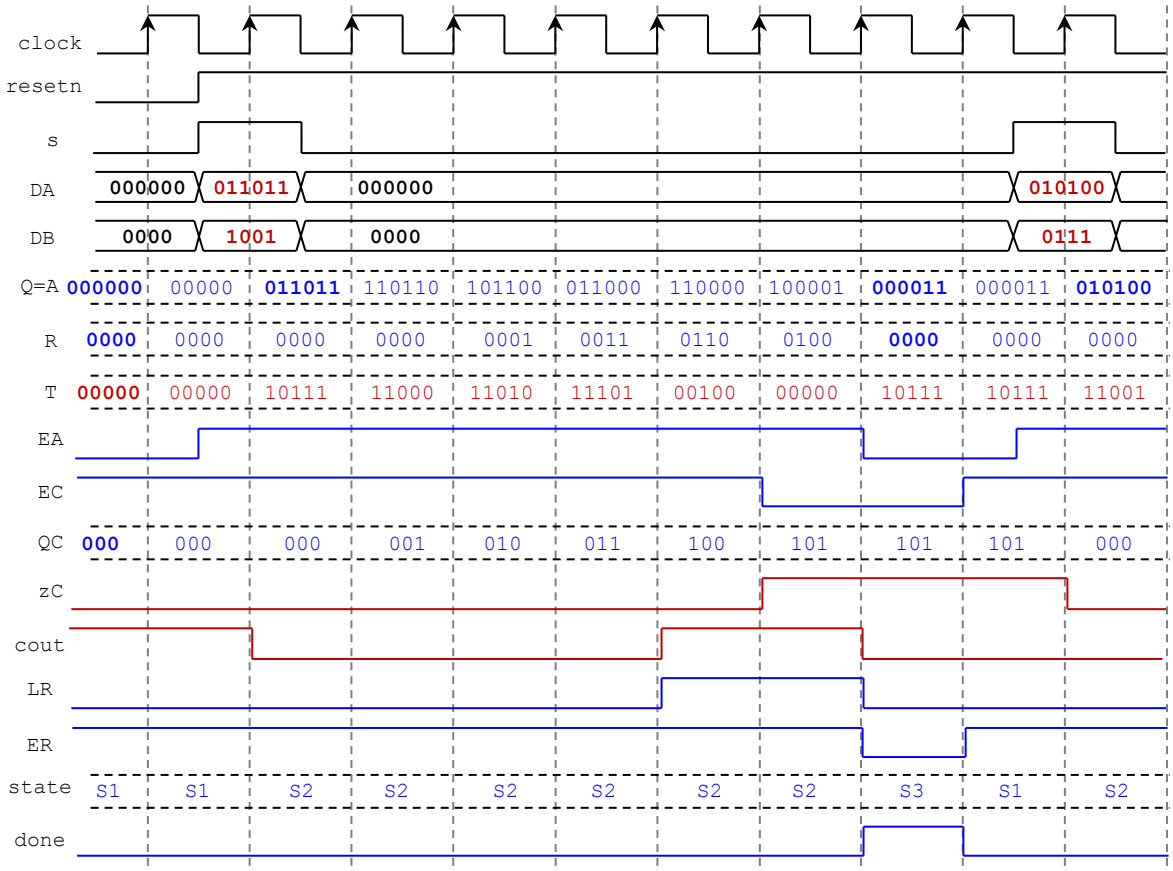


# PROBLEM 6 (14 PTS)

- Attach a printout of your Project Status Report (no more than 3 pages, single-spaced, 2 columns). This report should contain the current status of the project, including more details about the design and its components. You **MUST** use the provided template (`Final Project – Report Template.docx`).